A Second Kind of Light

A model of phototransduction by the human circadian system

Scientists at the LRC have developed a model of human circadian phototransduction that represents a significant step forward in understanding how the human circadian system responds to light. This model postulates the mechanisms by which humans process light for the circadian system, the system that regulates rhythms such as body temperature, hormone production, alertness, and sleep patterns.

The model can be used to predict nocturnal melatonin suppression for monochromatic and polychromatic light. It takes into account the high sensitivity of the human circadian system to short-wavelength (blue) light as well as evidence for spectral opponency, where middle-wavelength (yellow) light, when added to short-wavelength light, actually *reduces* the effectiveness of the resulting white light.

Model development

The model is based on recently published evidence from electrophysiology and neuroanatomy.

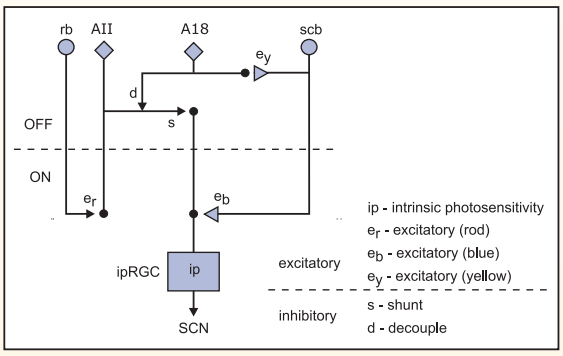

Modeled interface between retinal neurons (rb: rod bipolar cell, scb: short-wavelength cone bipolar cell, AII: AII type amacrine cell, A18: A18 type amacrine cell, ipRGC: intrinsically photosensitive retinal ganglion cell, SCN: suprachiasmatic nucleus).

The model of human circadian system incorporates traditional photoreceptors (rods and cones), spectral opponency mechanisms leading to color vision, and newly-discovered retinal neurons that respond directly to light exposure. These neurons are known as ipRGCs (for *intrinsically-photosensitive retinal ganglion cells*).

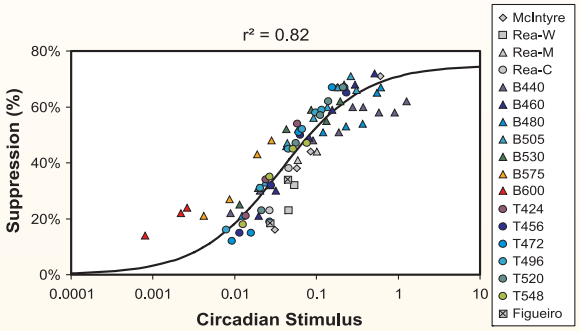

Human nocturnal melatonin suppression measured under different lighting conditions as a function of the circadian stimulus (CS) value predicted by the LRC model (McIntyre et al., 1989; Rea et al., 2001, 2002; Brainard et al., 2001 [B: numbers refer to wavelength in nm]; Thapan et al., 2001 [T: numbers refer to wavelength in nm]; Figueiro et al., 2004).

The model is theoretically important for generating hypotheses about neural mechanisms, and practically important for predicting the relative effectiveness of different light sources for impacting the human circadian system.

Next steps

LRC scientists will extend and refine this model as well as bridge the findings to practical applications.

The paper, *A model of phototransduction by the human circadian system,* will be published in 2005 in the journal, *Brain Research Reviews*.

Sponsor

Lighting Research Center

For more information

www.lrc.rpi.edu/programs/lightHealth

Rensselaer

Lighting Research Center

Lighting Research Center, Rensselaer Polytechnic Institute • 21 Union Street • Troy, NY 12180 • (518) 687-7100 • www.lrc.rpi.edu

© 2005 Rensselaer Polytechnic Institute. All rights reserved.